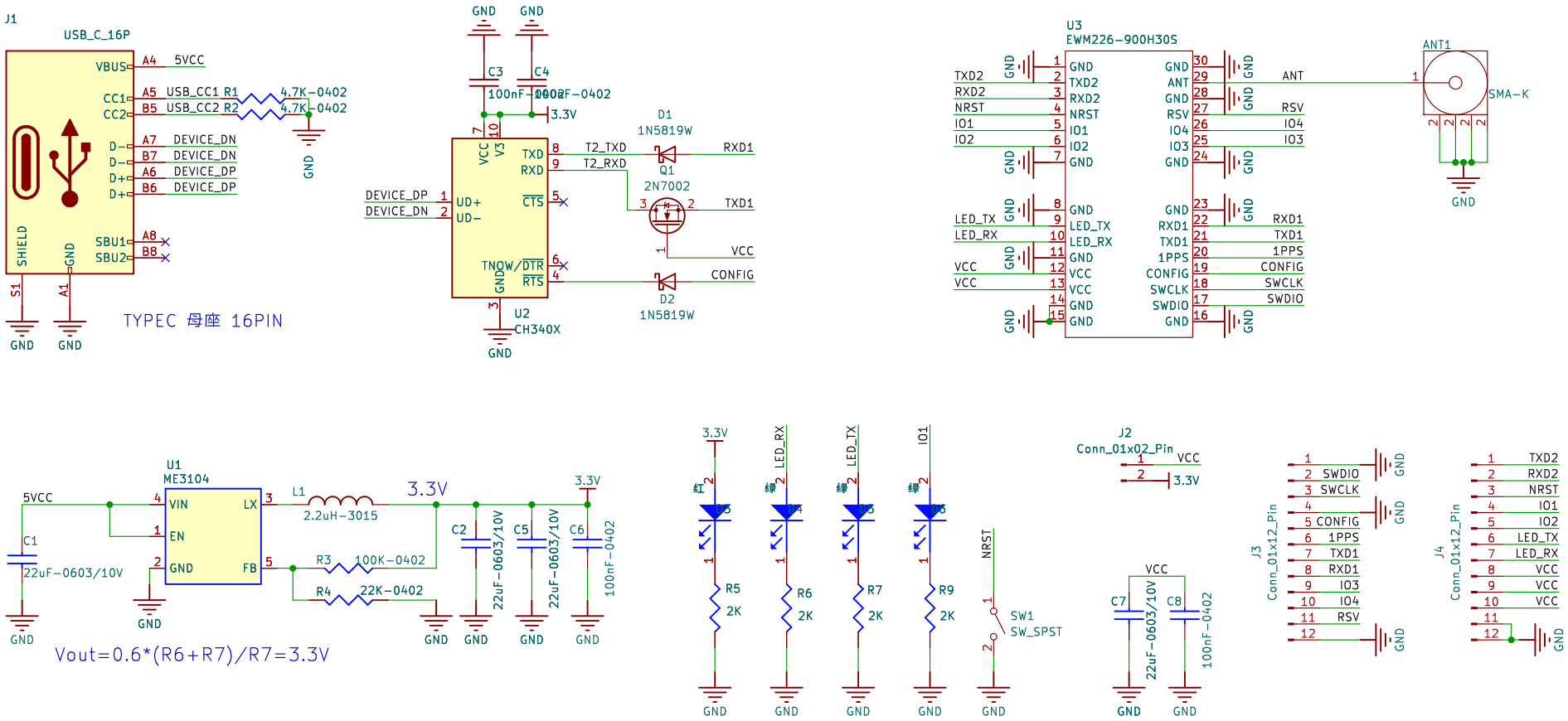

Sheet: /
File: 10947-V1.2.kicad_sch

Title:

Size: A4	Date:	Rev:
KiCad E.D.A. 9.0.4		Id: #/1